ODL, Inc.

OPAQUE STEEL ENTRY DOOR SINGLE

INSWING/OUTSWING "NON-IMPACT"

GENERAL NOTES

1. This product has been evaluated and is in compliance with the 9th Edition (2026) Florida Building Code (FBC) structural requirements excluding the "High Velocity Hurricane Zone" (HVHZ).
2. Product anchors shall be as listed and spaced as shown on details. Anchor embedment to base material shall be beyond wall dressing or stucco.
3. When used in areas requiring wind borne debris protection, this product is required to be protected with an impact resistant covering that complies with FBC Sections 1609.1.2 & R301.2.1.2.
4. For 2x stud framing construction, anchoring of these units shall be the same as that shown for 2x buck masonry construction.
5. Site conditions that deviate from the details of this drawing require further engineering analysis by a licensed engineer or registered architect.

TABLE OF CONTENTS

SHEET #	DESCRIPTION
1	Typical Elevations, Design Pressures & General Notes
2	Door Panel Details
3	Horizontal & Vertical Cross Sections (2X Buck)
4	Horizontal & Vertical Cross Sections (1X Buck)
5	Horizontal & Vertical Cross Sections (Direct to Masonry)
6	Vertical Cross Sections
7	Buck & Frame Anchoring & Hardware Details
8	Bill of Materials & Components

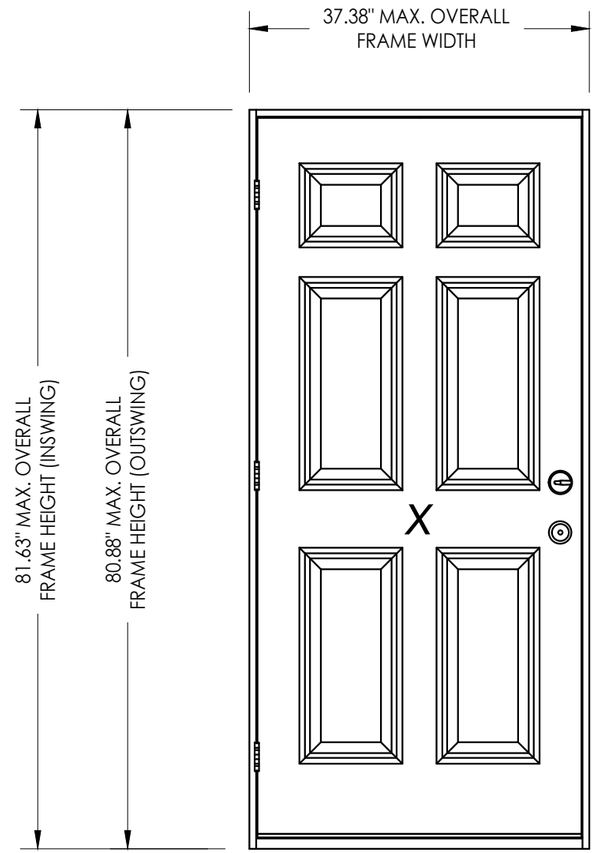

CONFIGURATION	MAX. FRAME DIMENSION	DESIGN PRESSURE (PSF) INSWING		DESIGN PRESSURE (PSF) OUTSWING	
		POSITIVE	NEGATIVE	POSITIVE	NEGATIVE
X	37.38" x 81.75"	+60.0	-65.0	+60.0	-60.0

L F Schmidt

L. F. SCHMIDT LICENSE No. 43409 STATE OF FLORIDA PROFESSIONAL ENGINEER

Digitally signed by Lyndon F Schmidt
Date: 2026.07.16 07:48:45 -04'00'

This item has been digitally signed and sealed by **L. F. Schmidt, P.E.** on the date adjacent to the seal.

Printed copies of this document are not considered signed and sealed and the signature must be verified on any electronic copies.

THIS PRODUCT APPROVAL IS VALID ONLY FOR THE STATE OF FLORIDA

Documents Prepared By:
Lyndon F. Schmidt
P.E. No. 43409

RW BUILDING CONSULTANTS, INC.
P.O. Box 230, Valrico, FL 33595
Phone No.: 813.659.9197
FBPE Registry No. 9813

PRODUCT: ODL, INC. STEEL DOOR

PART OR ASSEMBLY: TYPICAL ELEVATION, DESIGN PRESSURES & GENERAL NOTES

REVISIONS

NO.	DATE	NAME CHANGE	BY
4	7/02/26	UPDATE TO 9TH ED. (2026) FBC	LFS
3	3/30/26	MANUFACTURER'S	LFS

DATE: 3/18/26
SCALE: N.T.S.
DWG. BY: LFS
CHK. BY: RW
DRAWING NO.: FL-29651.1
SHEET 1 OF 8

© 2019 R.W. Building Consultants Inc.

Z:\2023 FBC Drawings\ODL, Inc\FL-29651 R3\FL-29651.1-3.dwg

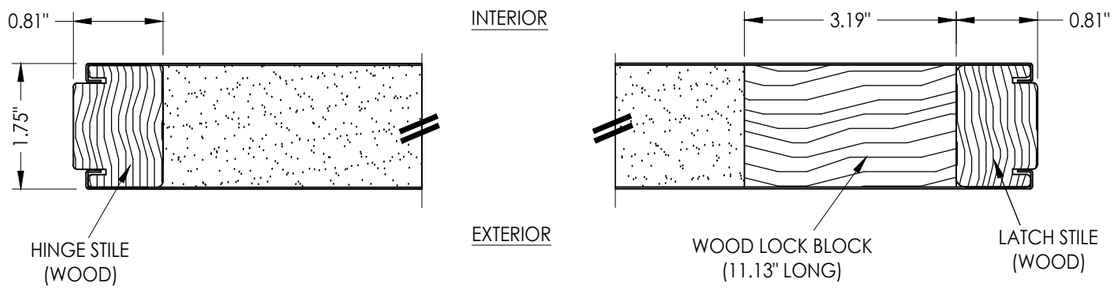

1/2 **HORIZONTAL CROSS SECTION**

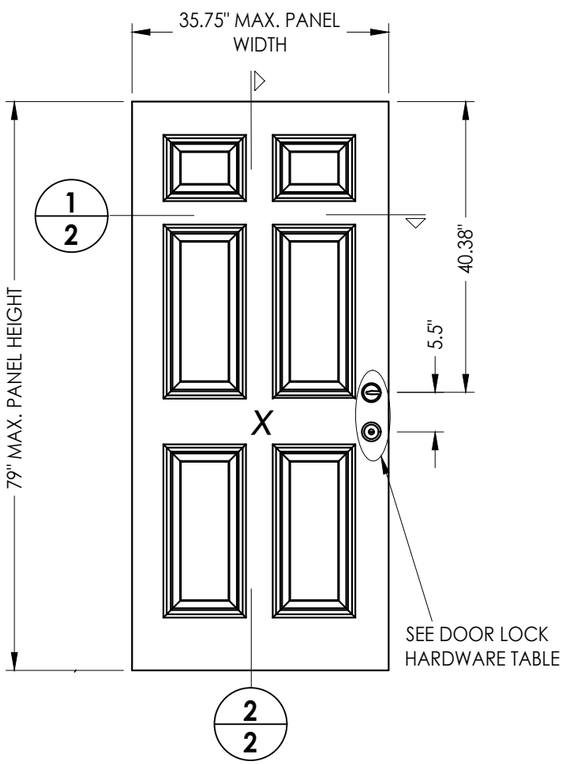

40 **STEEL DOOR PANEL**
ODL, INC.

STEEL SKIN: 25 GA. (0.018" MIN. THK.)
FOAM CORE: POLYUREHTANE

HARDWARE TABLE		
MANUFACTURER	MODEL	
KWIKSET	KNOB: DEADBOLT:	SIGNATURE SERIES SIGNATURE SERIES (780)
SCHLAGE	KNOB: DEADBOLT:	F-SERIES (F51) B-SERIES (B60)

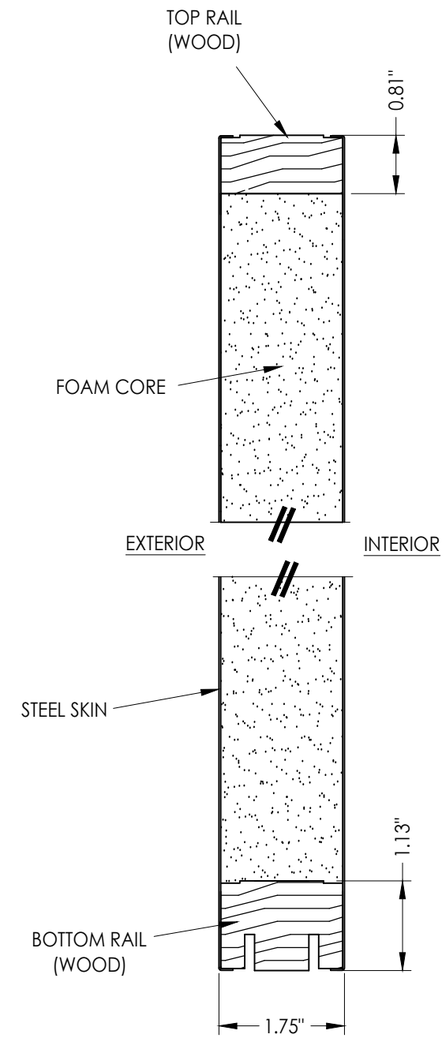

2/2 **VERTICAL CROSS SECTION**

Documents Prepared By:
Lyndon F. Schmidt
P.E. No. 43409
BUILDING CONSULTANTS, INC.
P.O. Box 230, Valrico, FL 33595
Phone No.: 813.659.9197
FBPE Registry No. 9813

PRODUCT: ODL, INC. STEEL DOOR

PART OR ASSEMBLY: DOOR PANEL DETAILS

REVISIONS

NO.	DATE		BY
4	7/02/26	UPDATE TO 9TH ED. (2026) FBC	LFS
3	3/30/26	MANUFACTURER'S NAME CHANGE	LFS

DATE: 3/18/26
SCALE: N.T.S.
DWG. BY: LFS
CHK. BY: RW
DRAWING NO.: FL-29651.1
SHEET 2 OF 8

© 2019 R.W. Building Consultants Inc.

Z:\2023 FBC Drawings\ODL, Inc\FL-29651 R3\FL-29651.1-3.dwg

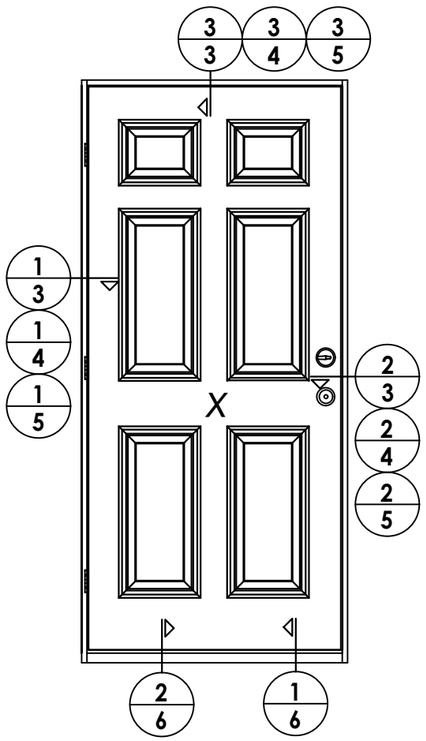

ELEVATION
X

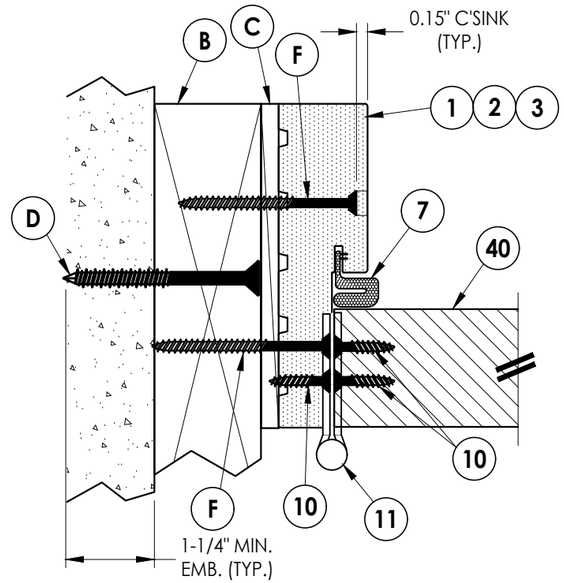

1/3 **HORIZONTAL CROSS SECTION**
Inswing Shown (Outswing Similar)
2X Buck Construction

EXTERIOR

INTERIOR

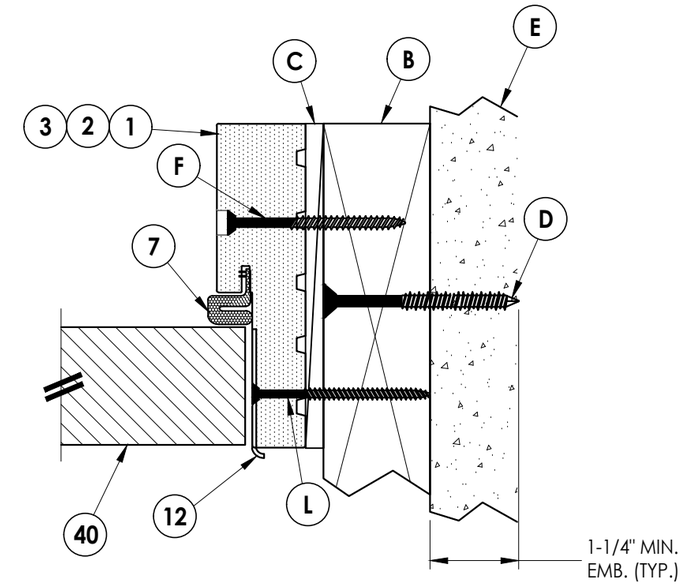

2/3 **HORIZONTAL CROSS SECTION**
Inswing Shown (Outswing Similar)
2X Buck Construction

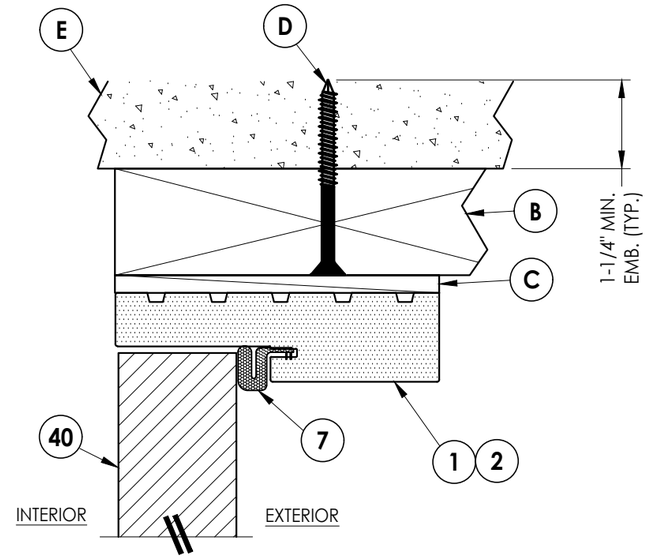

3/3 **VERTICAL CROSS SECTION**
Inswing Shown (Outswing Similar)
2X Buck Construction

Documents Prepared By:
Lyndon F. Schmidt
P.E. No. 43409

RW BUILDING CONSULTANTS, INC.
P.O. Box 230, Valrico, FL 33595
Phone No.: 813.659.9197
FBPE Registry No. 9813

PRODUCT: ODL, INC. STEEL DOOR

PART OR ASSEMBLY: HORIZONTAL & VERTICAL CROSS SECTIONS (2X BUCK)

REVISIONS

NO.	DATE	BY
4	7/02/26	LFS
3	3/30/26	LFS

UPDATE TO 9TH ED. (2026) FBC
MANUFACTURER'S NAME CHANGE

DATE: 3/18/26
SCALE: N.T.S.
DWG. BY: LFS
CHK. BY: RW
DRAWING NO.: FL-29651.1
SHEET 3 OF 8

© 2019 R.W. Building Consultants Inc.

Z:\2023 FBC Drawings\ODL, Inc\FL-29651 R3\FL-29651.1-3.dwg

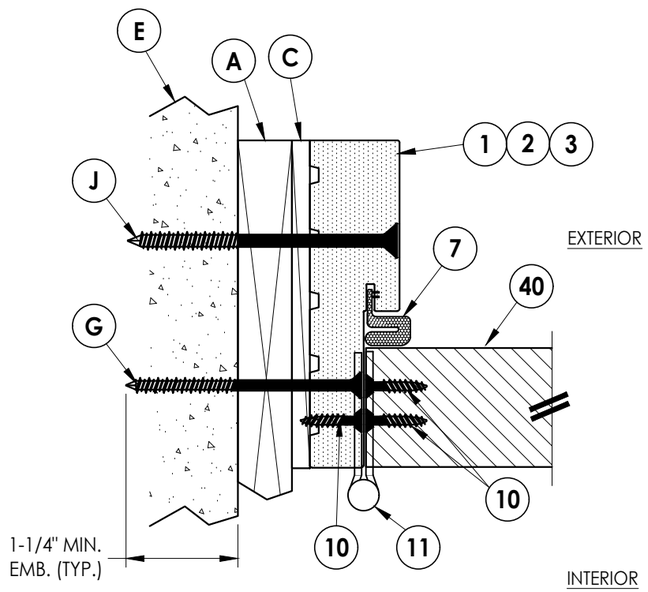

1/4 HORIZONTAL CROSS SECTION
Inswing Shown (Outswing Similar)
1X Buck Construction

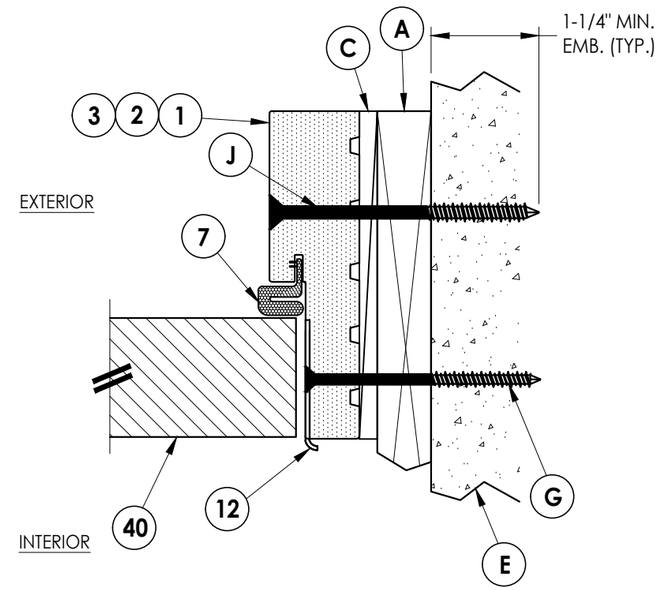

2/4 HORIZONTAL CROSS SECTION
Inswing Shown (Outswing Similar)
1X Buck Construction

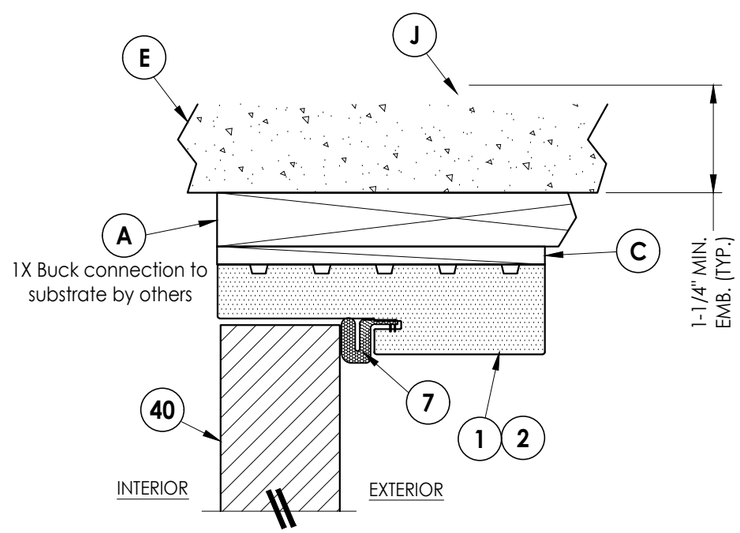

3/4 VERTICAL CROSS SECTION
Inswing Shown (Outswing Similar)
1X Buck Construction

Documents Prepared By:
Lyndon F. Schmidt
P.E. No. 43409

RW BUILDING CONSULTANTS, INC.
P.O. Box 230, Valrico, FL 33595
Phone No.: 813.659.9197
FBPE Registry No. 9813

PRODUCT: ODL, INC. STEEL DOOR

PART OR ASSEMBLY: HORIZONTAL & VERTICAL CROSS SECTIONS (1X BUCK)

REVISIONS

NO.	DATE	BY	
4	7/02/26	LFS	UPDATE TO 9TH ED. (2026) FBC
3	3/30/26	LFS	MANUFACTURER'S NAME CHANGE

DATE: 3/18/26
SCALE: N.T.S.
DWG. BY: LFS
CHK. BY: RW
DRAWING NO.: FL-29651.1
SHEET 4 OF 8

© 2019 R.W. BUILDING CONSULTANTS INC.

Z:\2023 FBC Drawings\ODL, Inc\FL-29651 R3\FL-29651.1-3.dwg

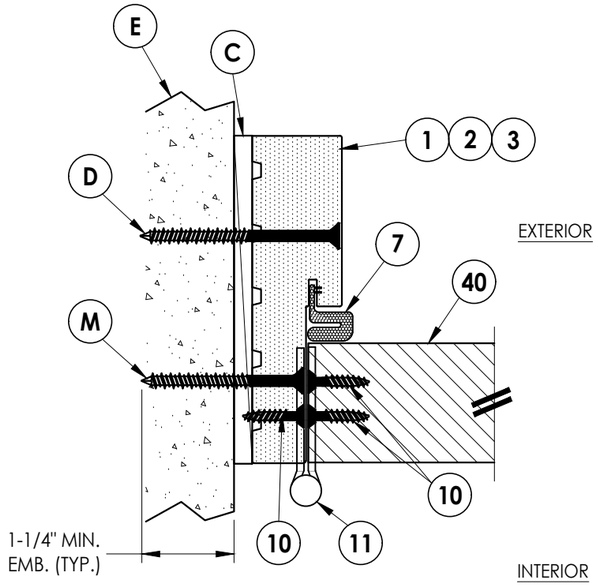

1/5 HORIZONTAL CROSS SECTION
Inswing Shown (Outswing Similar)
Shown Direct to Masonry

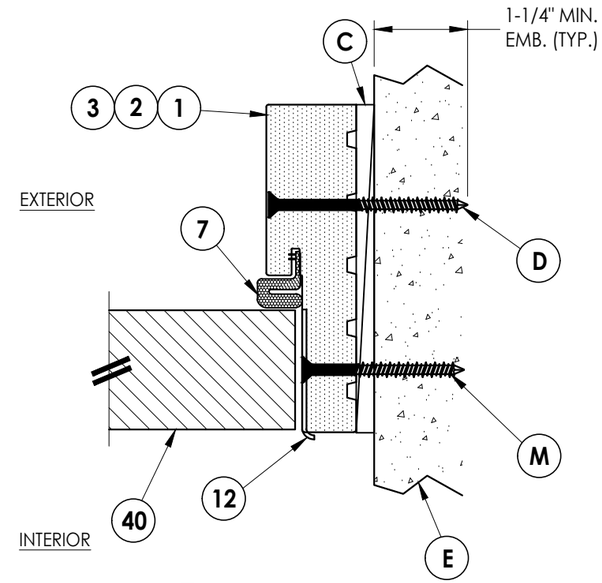

2/5 HORIZONTAL CROSS SECTION
Inswing Shown (Outswing Similar)
Shown Direct to Masonry

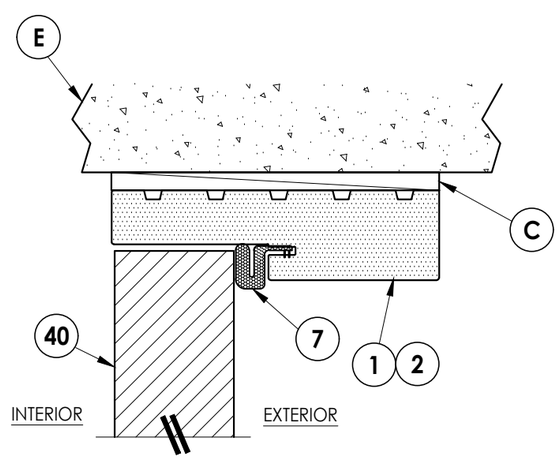

3/5 VERTICAL CROSS SECTION
Inswing Shown (Outswing Similar)
Shown Direct to Masonry

Documents Prepared By:
Lyndon F. Schmidt
P.E. No. 43409

RW BUILDING CONSULTANTS, INC.
P.O. Box 230, Valrico, FL 33595
Phone No.: 813.659.9197
FBPE Registry No. 9813

PRODUCT: ODL, INC. STEEL DOOR

PART OR ASSEMBLY: HORIZONTAL & VERTICAL CROSS SECTIONS (DIRECT TO MASONRY)

REVISIONS

NO.	DATE		BY
4	7/02/26	UPDATE TO 9TH ED. (2026) FBC	LFS
3	3/30/26	MANUFACTURER'S NAME CHANGE	LFS

DATE: 3/18/26
SCALE: N.T.S.
DWG. BY: LFS
CHK. BY: RW
DRAWING NO.: FL-29651.1
SHEET 5 OF 8

© 2019 R.W. Building Consultants Inc.

Z:\2023 FBC Drawings\ODL, Inc\FL-29651 R3\FL-29651.1-3.dwg

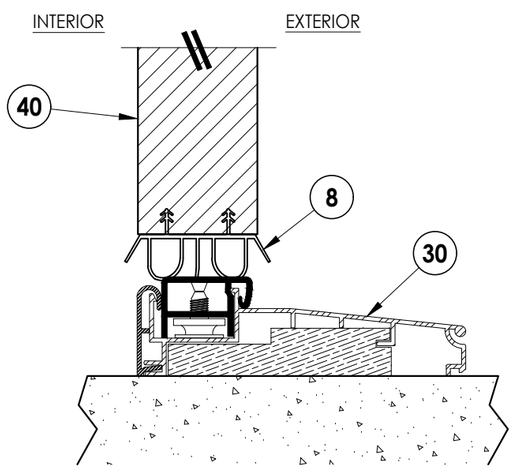

1/6 **VERTICAL CROSS SECTION**
Inswing sill

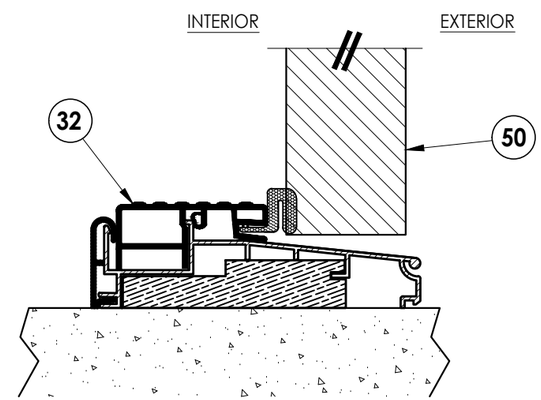

2/6 **VERTICAL CROSS SECTION**
Outswing sill

Documents Prepared By:
Lyndon F. Schmidt
P.E. No. 43409

RW BUILDING CONSULTANTS, INC.
P.O. Box 230, Valrico, FL 33595
Phone No.: 813.659.9197
FBPE Registry No. 9813

PRODUCT: ODL, INC. STEEL DOOR

PART OR ASSEMBLY: VERTICAL CROSS SECTIONS

NO.	DATE	REVISIONS	BY
4	7/02/26	UPDATE TO 9TH ED. (2026) FBC	LFS
3	3/30/26	MANUFACTURER'S NAME CHANGE	LFS

DATE: 3/18/26
SCALE: N.T.S.
DWG. BY: LFS
CHK. BY: RW
DRAWING NO.: FL-29651.1
SHEET 6 OF 8

© 2019 R.W. Building Consultants Inc.

Z:\2023 FBC Drawings\ODL, Inc\FL-29651 R3\FL-29651.1-3.dwg

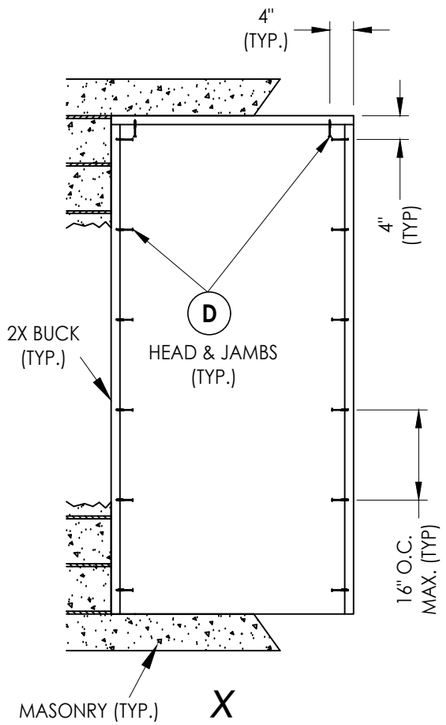

2X BUCK ANCHORING

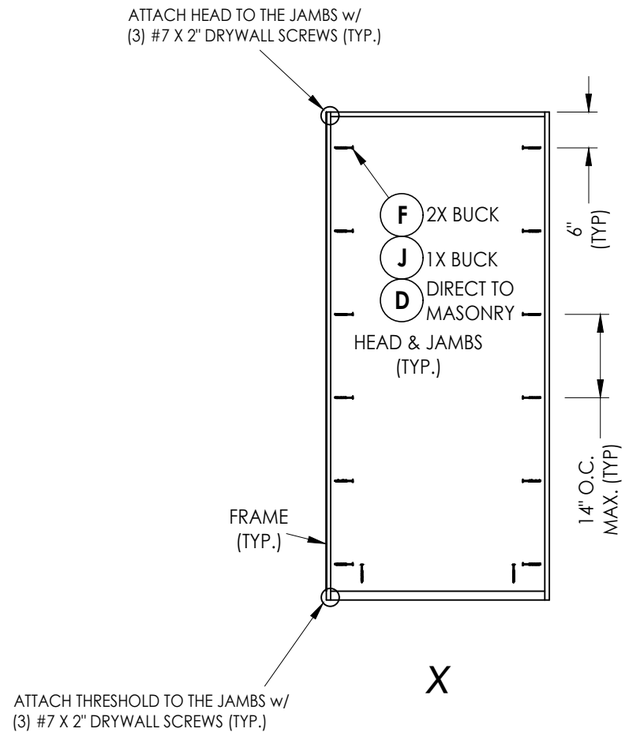

FRAME ANCHORING

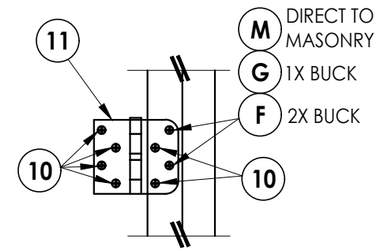

HINGE DETAIL
INSWING

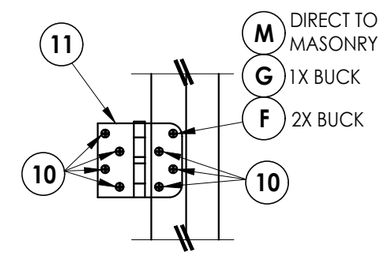

HINGE DETAIL
OUTSWING

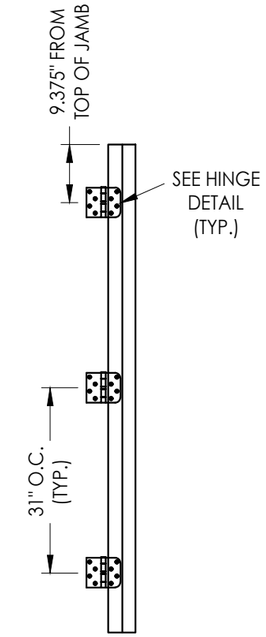

HINGE JAMB

CONCRETE ANCHOR NOTES:

1. *Concrete anchor locations at the corners may be adjusted to maintain the min. edge distance to mortar joints.*
2. *Concrete anchor locations noted as "MAX. ON CENTER" must be adjusted to maintain the min. edge distance to mortar joints, additional concrete anchors may be required to ensure the "MAX. ON CENTER" dimension are not exceeded.*
3. *Concrete anchor table:*

ANCHOR TYPE	ANCHOR SIZE	MIN. EMBEDMENT	MIN. CLEARANCE TO MASONRY EDGE	MIN. CLEARANCE TO ADJACENT ANCHOR
ITW BUILDEX TAPCON®	3/16"	1-1/4"	3"	1-1/2"
	1/4"	1-1/4"	2"	4"
DeWALT ULTRACON®+	1/4"	1-1/4"	1"	4"

WOOD SCREW INSTALLATION NOTES:

1. *Maintain a minimum 5/8" edge distance, 1" end distance, & 1" o.c. spacing of wood screws to prevent the splitting of wood.*

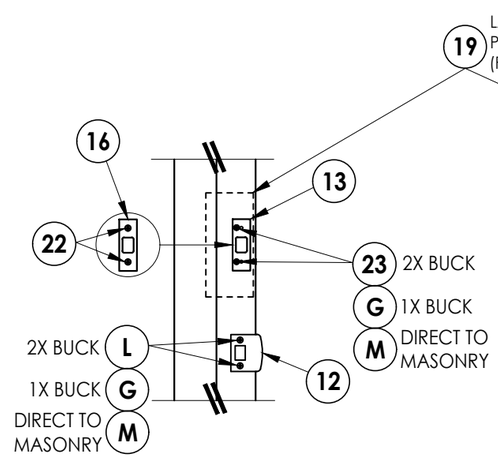

LATCH & DEADBOLT DETAIL
Schlage

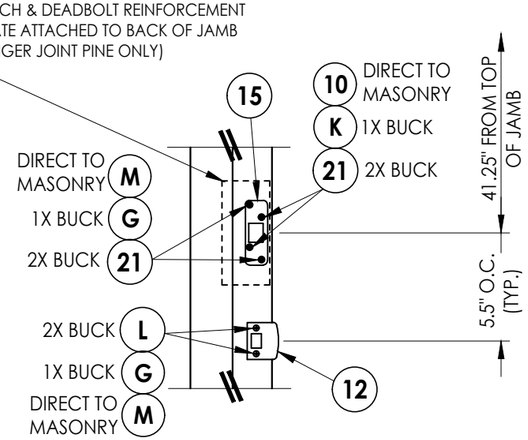

LATCH & DEADBOLT DETAIL
Kwikset

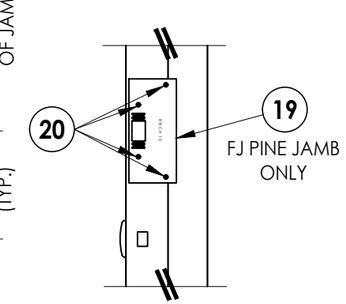

LATCH & DEADBOLT DETAIL
Reinforcement Plate

Documents Prepared By:
Lyndon F. Schmidt
P.E. No. 43409
RW BUILDING CONSULTANTS, INC.
P.O. Box 230, Valrico, FL 33595
Phone No.: 813.659.9197
FBPE Registry No. 9813

PRODUCT: ODL, INC. STEEL DOOR

PART OR ASSEMBLY: BUCK & FRAME ANCHORING & HARDWARE DETAILS

REVISIONS

NO.	DATE	BY
4	7/02/26	UPDATE TO 9TH ED. (2026) FBC	LFS
3	3/30/26	MANUFACTURER'S NAME CHANGE	LFS

DATE: 3/18/26
SCALE: N.T.S.
DWG. BY: LFS
CHK. BY: RW
DRAWING NO.: FL-29651.1
SHEET 7 OF 8

© 2019 R.W. BUILDING CONSULTANTS INC.

Z:\2023 FBC Drawings\ODL, Inc\FL-29651 R3\FL-29651.1-3.dwg

BILL OF MATERIALS

ITEM #	DESCRIPTION	MATERIAL
A	1X BUCK (G >= 0.42)	WOOD
B	2X BUCK (G >= 0.42)	WOOD
C	1/4" MAX. SHIM SPACE	-
D	1/4" X 2-3/4" PFH DeWALT OR ITW CONCRETE SCREW	STEEL
E	MASONRY - 3,000 PSI MIN. CONCRETE CONFORMING TO ACI 301 OR HOLLOW BLOCK CONFORMING TO ASTM C90	CONCRETE
F	#10 X 2-1/2" PFH WOOD SCREW (1.15" MIN. EMBEDMENT)	STEEL
G	3/16" X 3-1/4" PFH ITW CONCRETE SCREW	STEEL
J	1/4" X 3-3/4" PFH DeWALT OR ITW CONCRETE SCREW	STEEL
K	#10 X 2" PFH WOOD SCREW	STEEL
L	#8 X 2-1/2" PFH WOOD SCREW	STEEL
M	3/16" X 2-1/4" PFH ITW CONCRETE SCREW	STEEL
1	COMPOSITE JAMB	COMP
2	FINGER JOINT PINE JAMB (G >= 0.42)	WOOD
3	COMPOSITE CAVITY JAMB	COMP
7	WEATHERSTRIP	FOAM
8	DOOR BOTTOM SWEEP	VINYL
10	#10 X 1" PFH WOOD SCREW	STEEL
11	4" X 4" BUTT HINGE	STEEL
12	LATCH STRIKE PLATE	STEEL
13	DEADBOLT STRIKE PLATE	STEEL
15	DEADBOLT STRIKE PLATE (SECURITY)	STEEL
16	DEADBOLT STRIKE BACK PLATE (SCHLAGE)	STEEL
19	LATCH & DEADBOLT REINFORCEMENT PLATE (4" X 8" - 16 GA. STEEL PLATE)	STEEL
20	#8 X 1/2" SD PH SMS	STEEL
21	#10 X 3" PFH SMS	STEEL
22	#10 X 3/4" FH SMS	STEEL
23	#12 X 2-1/2" PFH WOOD SCREW	STEEL
30	INSWING THRESHOLD	ALUM/WOOD
32	OUTSWING THRESHOLD	ALUM/WOOD
40	DOOR PANEL - SEE DOOR PANEL DETAIL SHEET FOR DETAILS	-

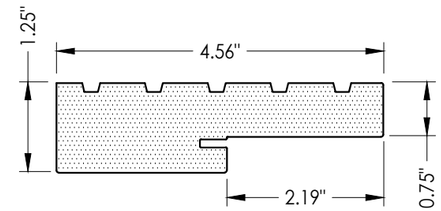

1 **COMPOSITE JAMB**
WORLDWIDE 4EVER JAMB

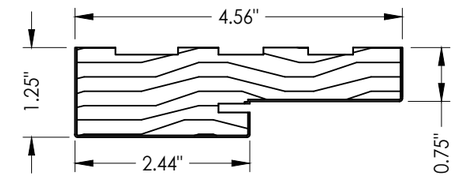

2 **FINGER JOINT PINE JAMB**

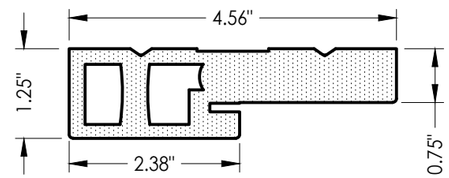

3 **COMPOSITE CAVITY JAMB**
WORLDWIDE 4EVER JAMB

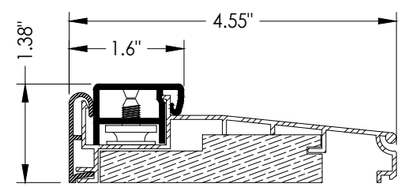

30 **INSWING THRESHOLD**
WORLDWIDE

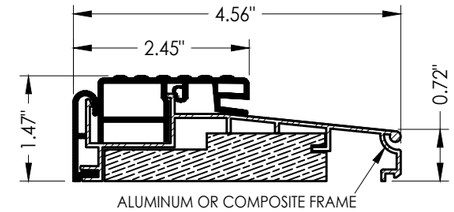

32 **OUTSWING THRESHOLD**
WORLDWIDE

Documents Prepared By:
Lyndon F. Schmidt
P.E. No. 43409

RW BUILDING CONSULTANTS, INC.
P.O. Box 230, Valrico, FL 33595
Phone No.: 813.659.9197
FBPE Registry No. 9813

PRODUCT: ODL, INC. STEEL DOOR

PART OR ASSEMBLY: BILL OF MATERIALS & COMPONENTS

REVISIONS

NO.	DATE		BY
4	7/02/26	UPDATE TO 9TH ED. (2026) FBC	LFS
3	3/30/26	MANUFACTURER'S NAME CHANGE	LFS

DATE: 3/18/26
SCALE: N.T.S.
DWG. BY: LFS
CHK. BY: RW
DRAWING NO.: FL-29651.1
SHEET 8 OF 8

© 2019 R.W. BUILDING CONSULTANTS INC.

Z:\2023 FBC Drawings\ODL, Inc\FL-29651 R3\FL-29651.1-3.dwg